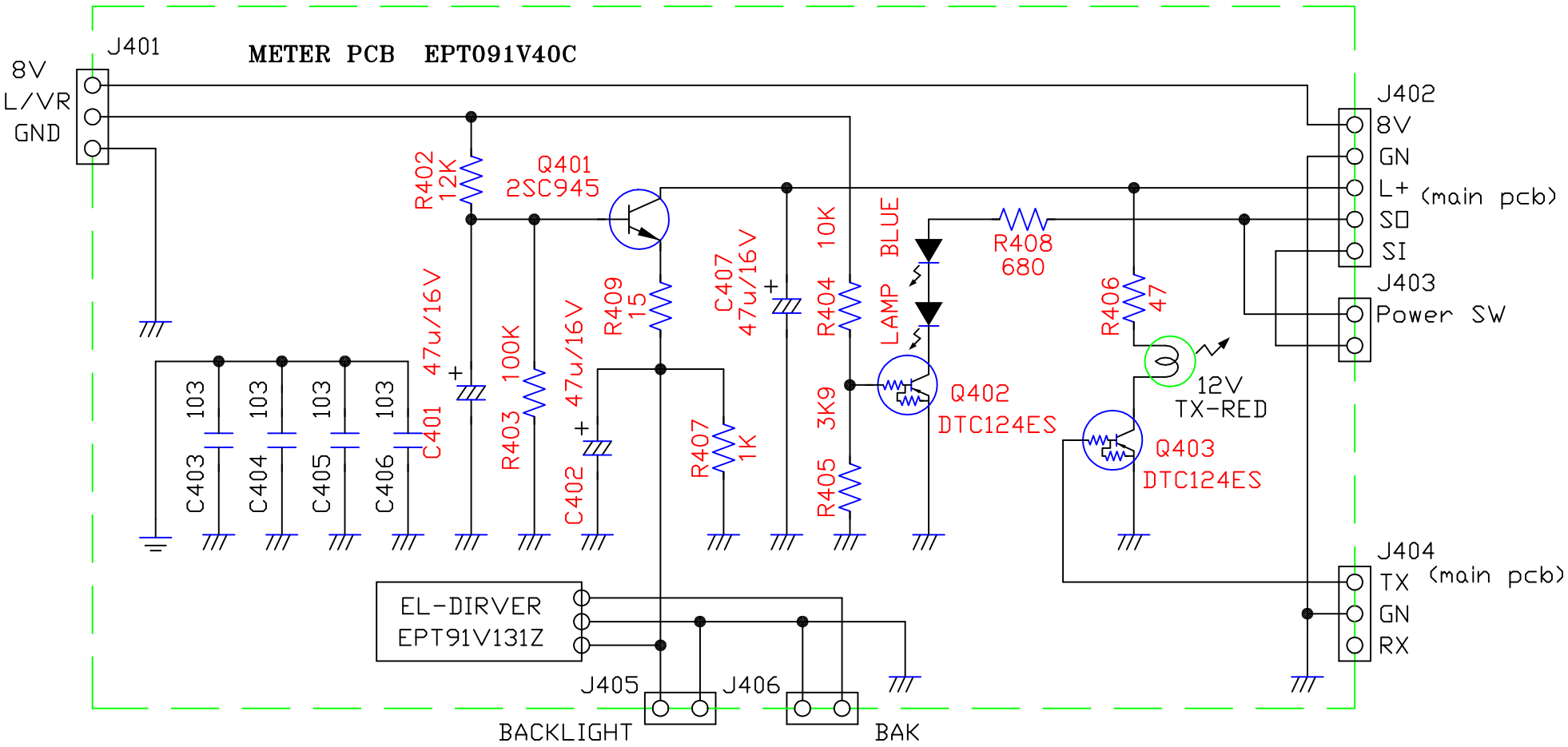
METER PCB EPT091V40C
J401
8V
L/VR
GND
J402
8V
GN
L+
SO
SI
(main pcb)
J403
Power SW
J404
TX
GN
RX
(main pcb)
R402
12K
Q401
2SC945
47u/16V
C401
R403
100K
47u/16V
C402
R409
15
R407
1K
C407
47u/16V
R404
10K
R405
3K9
LAMP
BLUE
Q402
DTC124ES
R408
680
R406
47
12V
TX-RED
Q403
DTC124ES
103
C403
103
C404
103
C405
103
C406
EL-DIRVER
EPT91V131Z
J405
J406
BACKLIGHT
BAK